8 MHz Rail-to-Rail Operational Amplifiers

AD8519/AD8529

FEATURES

Space-saving SC70 and SOT-23 packaging
Wide bandwidth: 8 MHz @ 5 V
Low offset voltage: 1.2 mV maximum
Rail-to-rail output swing
2.9 V/µs slew rate
Unity gain stable
Single-supply operation: 2.7 V to 12 V

APPLICATIONS

Portable communications
Microphone amplifiers
Portable phones
Sensor interface
Active filters
PCMCIA cards
ASIC input drivers
Wearable computers
Battery-powered devices
Voltage reference buffers
Personal digital assistants

PIN CONFIGURATIONS

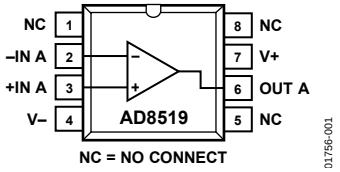

Figure 1. 8-Lead SOIC (R Suffix)

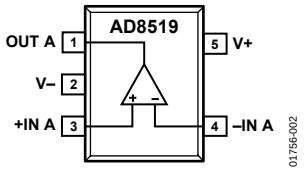

Figure 2. 5-Lead SC70 and SOT-23 (KS and RJ Suffixes)

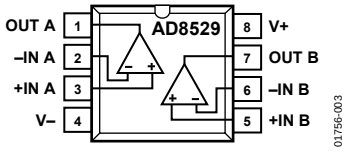

Figure 3. 8-Lead SOIC and MSOP (R and RM Suffixes)

GENERAL DESCRIPTION

The AD8519 and AD8529 are rail-to-rail output bipolar amplifiers with a unity gain bandwidth of 8 MHz and a typical voltage offset of less than 1 mV. The AD8519 brings precision and bandwidth to the SC70 and SOT-23 packages. The low supply current makes the AD8519/AD8529 ideal for battery-powered applications. The rail-to-rail output swing of the AD8519/AD8529 is larger than standard video op amps, making them useful in applications that require greater dynamic range than standard video op amps. The 2.9 V/µs slew rate makes the AD8519/AD8529 a good match for driving ASIC inputs such as voice codecs.

The small SC70 package makes it possible to place the AD8519 next to sensors, reducing external noise pickup.

The AD8519/AD8529 is specified over the extended industrial (−40°C to +125°C) temperature range. The AD8519 is available in 5-lead SC70 and 5-lead SOT-23 packages, and an 8-lead SOIC surface-mount package. The AD8529 is available in 8-lead SOIC and 8-lead MSOP packages.

Rev. D
Information furnished by Analog Devices is believed to be accurate and reliable. However, no responsibility is assumed by Analog Devices for its use, nor for any infringements of patents or other rights of third parties that may result from its use. Specifications subject to change without notice. No license is granted by implication or otherwise under any patent or patent rights of Analog Devices. Trademarks and registered trademarks are the property of their respective owners.

One Technology Way, P.O. Box 9106, Norwood, MA 02062-9106, U.S.A.
Tel: 781.329.4700 **www.analog.com**
Fax: 781.461.3113 **©1998–2007 Analog Devices, Inc. All rights reserved.**

TABLE OF CONTENTS

Features ... 1
Applications ... 1
Pin Configurations ... 1
General Description ... 1
Revision History ... 2
Specifications ... 3
  Electrical Characteristics ... 3
Absolute Maximum Ratings ... 7
  Thermal Resistance ... 7
  ESD Caution ... 7
Typical Performance Characteristics ... 8
Applications Information ... 12
  Maximum Power Dissipation ... 12
  Precision Full-Wave Rectifier ... 12
  10× Microphone Preamp Meets PC99 Specifications ... 13
  Two-Element Varying Bridge Amplifier ... 13
Outline Dimensions ... 14
  Ordering Guide ... 15

REVISION HISTORY

5/07—Rev. C to Rev. D

Changes to Features ... 1
Changes to General Description ... 1
Changes to Two-Element Bridge Amplifier Section ... 13
Updated Outline Dimensions ... 14

2/03—Rev. B to Rev. C

Changed μSOIC to MSOP ... Universal
Changed SO-8 to R-8 ... Universal
Changes to Precision Full-Wave Rectifier section ... 9
Changes to 10× Microphone Preamp Meets PC99 Specifications section ... 9
Updated Outline Dimensions ... 12

SPECIFICATIONS

ELECTRICAL CHARACTERISTICS

V_S = 5.0 V, V− = 0 V, V_{CM} = 2.5 V, T_A = 25°C, unless otherwise noted.

Table 1.

Parameter	Symbol	Conditions	Min	Typ	Max	Unit
INPUT CHARACTERISTICS						
Offset Voltage	V_{OS}	AD8519AKS, AD8519ART		600	1100	µV
		−40°C ≤ T_A ≤ +125°C		800	1300	µV
		AD8519AR (R-8), AD8529		600	1000	µV
		−40°C ≤ T_A ≤ +125°C			1100	µV
Input Bias Current	I_B				300	nA
		−40°C ≤ T_A ≤ +125°C			400	nA
Input Offset Current	I_{OS}				±50	nA
		−40°C ≤ T_A ≤ +125°C			±100	nA
Input Voltage Range	V_{CM}		0		4	V
Common-Mode Rejection Ratio	CMRR	0 V ≤ V_{CM} ≤ 4.0 V, −40°C ≤ T_A ≤ +125°C	63	100		dB
Large Signal Voltage Gain	A_{VO}	R_L = 2 kΩ, 0.5 V < V_{OUT} < 4.5 V		30		V/mV
		R_L = 10 kΩ, 0.5 V < V_{OUT} < 4.5 V	50	100		V/mV
		R_L = 10 kΩ, −40°C ≤ T_A ≤ +125°C	30			V/mV
Offset Voltage Drift	$\Delta V_{OS}/\Delta T$			2		µV/°C
Bias Current Drift	$\Delta I_B/\Delta T$			500		pA/°C
OUTPUT CHARACTERISTICS						
Output Voltage Swing High	V_{OH}	I_L = 250 µA				
		−40°C ≤ T_A ≤ +125°C	4.90			V
		I_L = 5 mA	4.80			V
Output Voltage Swing Low	V_{OL}	I_L = 250 µA				
		−40°C ≤ T_A ≤ +125°C			80	mV
		I_L = 5 mA			200	mV
Short-Circuit Current	I_{SC}	Short to ground, instantaneous		±70		mA
Maximum Output Current	I_{OUT}			±25		mA
POWER SUPPLY						
Power Supply Rejection Ratio	PSRR	V_S = 2.7 V to 7 V		110		dB
		−40°C ≤ T_A ≤ +125°C		80		dB
Supply Current/Amplifier	I_{SY}	V_{OUT} = 2.5 V		600	1200	µA
		−40°C ≤ T_A ≤ +125°C			1400	µA
DYNAMIC PERFORMANCE						
Slew Rate	SR	1 V < V_{OUT} < 4 V, R_L = 10 kΩ		2.9		V/µs
Settling Time	t_S	To 0.01%		1200		ns
Gain Bandwidth Product	GBP			8		MHz
Phase Margin	Φ_m			60		Degrees
NOISE PERFORMANCE						
Voltage Noise	e_n p-p	0.1 Hz to 10 Hz		0.5		µV p-p
Voltage Noise Density	e_n	f = 1 kHz		10		nV/√Hz
Current Noise Density	i_n	f = 1 kHz		0.4		pA/√Hz

V_S = 3.0 V, V− = 0 V, V_{CM} = 1.5 V, T_A = 25°C, unless otherwise noted.

Table 2.

Parameter	Symbol	Conditions	Min	Typ	Max	Unit
INPUT CHARACTERISTICS						
Offset Voltage	V_{OS}	AD8519AKS, AD8519ART		700	1200	µV
		−40°C ≤ T_A ≤ +125°C		900	1400	µV
		AD8519AR (R-8), AD8529		700	1100	µV
		−40°C ≤ T_A ≤ +125°C			1200	µV
Input Bias Current	I_B				300	nA
Input Offset Current	I_{OS}				±50	nA
Input Voltage Range	V_{CM}		0		2	V
Common-Mode Rejection Ratio	CMRR	0 V ≤ V_{CM} ≤ 2.0 V,				
		−40°C ≤ T_A ≤ +125°C	55	75		dB
Large Signal Voltage Gain	A_{VO}	R_L = 2 kΩ, 0.5 V < V_{OUT} < 2.5 V		20		V/mV
		R_L = 10 kΩ	20	30		V/mV
OUTPUT CHARACTERISTICS						
Output Voltage Swing High	V_{OH}	I_L = 250 µA	2.90			V
		I_L = 5 mA	2.80			V
Output Voltage Swing Low	V_{OL}	I_L = 250 µA			100	mV
		I_L = 5 mA			200	mV
POWER SUPPLY						
Power Supply Rejection Ratio	PSRR	V_S = 2.5 V to 7 V, −40°C ≤ T_A ≤ +125°C	60	80		dB
Supply Current/Amplifier	I_{SY}	V_{OUT} = 1.5 V		600	1100	µA
		−40°C ≤ T_A ≤ +125°C			1300	µA
DYNAMIC PERFORMANCE						
Slew Rate	SR	R_L = 10 kΩ		1.5		V/µs
Settling Time	t_S	To 0.01%		2000		ns
Gain Bandwidth Product	GBP			6		MHz
Phase Margin	Φ_m			55		Degrees
NOISE PERFORMANCE						
Voltage Noise Density	e_n	f = 1 kHz		10		nV/√Hz
Current Noise Density	i_n	f = 1 kHz		0.4		pA/√Hz

V_S = 2.7 V, V− = 0 V, V_{CM} = 1.35 V, T_A = 25°C, unless otherwise noted.

Table 3.

Parameter	Symbol	Conditions	Min	Typ	Max	Unit
INPUT CHARACTERISTICS						
Offset Voltage	V_{OS}	AD8519AKS, AD8519ART		700	1400	µV
		−40°C ≤ T_A ≤ +125°C		900	1600	µV
		AD8519AR (R-8), AD8529		700	1200	µV
		−40°C ≤ T_A ≤ +125°C			1300	µV
Input Bias Current	I_B				300	nA
Input Offset Current	I_{OS}				±50	nA
Input Voltage Range	V_{CM}		0		2	V
Common-Mode Rejection Ratio	CMRR	0 V ≤ V_{CM} ≤ 1.7 V, −40°C ≤ T_A ≤ +125°C	55	75		dB
Large Signal Voltage Gain	A_{VO}	R_L = 2 kΩ, 0.5 V < V_{OUT} < 2.2 V		20		V/mV
		R_L = 10 kΩ	20	30		V/mV
OUTPUT CHARACTERISTICS						
Output Voltage Swing High	V_{OH}	I_L = 250 µA	2.60			V
		I_L = 5 mA	2.50			V
Output Voltage Swing Low	V_{OL}	I_L = 250 µA			100	mV
		I_L = 5 mA			200	mV
POWER SUPPLY						
Power Supply Rejection Ratio	PSRR	V_S = 2.5 V to 7 V				
		−40°C ≤ T_A ≤ +125°C	60	80		dB
Supply Current/Amplifier	I_{SY}	V_{OUT} = 1.35 V		600	1100	µA
		−40°C ≤ T_A ≤ +125°C			1300	µA
DYNAMIC PERFORMANCE						
Slew Rate	SR	R_L = 10 kΩ		1.5		V/µs
Settling Time	t_S	To 0.01%		2000		ns
Gain Bandwidth Product	GBP			6		MHz
Phase Margin	Φ_m			55		Degrees
NOISE PERFORMANCE						
Voltage Noise Density	e_n	f = 1 kHz		10		nV/√Hz
Current Noise Density	i_n	f = 1 kHz		0.4		pA/√Hz

V_S = 5.0 V, V− = −5 V, V_{CM} = 0 V, T_A = 25°C, unless otherwise noted.

Table 4.

Parameter	Symbol	Conditions	Min	Typ	Max	Unit
INPUT CHARACTERISTICS						
Offset Voltage	V_{OS}	AD8519AKS, AD8519ART		600	1100	µV
		−40°C ≤ T_A ≤ +125°C		800	1300	µV
		AD8519AR (R-8), AD8529		600	1000	µV
		−40°C ≤ T_A ≤ +125°C			1100	µV
Input Bias Current	I_B	V_{CM} = 0 V			300	nA
		V_{CM} = 0 V, −40°C ≤ T_A ≤ +125°C			400	nA
Input Offset Current	I_{OS}	V_{CM} = 0 V			±50	nA
		V_{CM} = 0 V, −40°C ≤ T_A ≤ +125°C			±100	nA
Input Voltage Range	V_{CM}		−5		+4	V
Common-Mode Rejection Ratio	CMRR	−4.9 V ≤ V_{CM} ≤ +4.0 V,				
		−40°C ≤ T_A ≤ +125°C	70	100		dB
Large Signal Voltage Gain	A_{VO}	R_L = 2 kΩ		30		V/mV
		R_L = 10 kΩ	50	200		V/mV
		−40°C ≤ T_A ≤ +125°C	25			V/mV
Offset Voltage Drift	$\Delta V_{OS}/\Delta T$			2		µV/°C
Bias Current Drift	$\Delta I_B/\Delta T$			500		pA/°C
OUTPUT CHARACTERISTICS						
Output Voltage Swing High	V_{OH}	I_L = 250 µA				
		−40°C ≤ T_A ≤ +125°C	4.90			V
		I_L = 5 mA	4.80			V
Output Voltage Swing Low	V_{OL}	I_L = 250 µA				
		−40°C ≤ T_A ≤ +125°C			−4.90	V
		I_L = 5 mA			−4.80	V
Short-Circuit Current	I_{SC}	Short to ground, instantaneous		±70		mA
Maximum Output Current	I_{OUT}			±25		mA
POWER SUPPLY						
Power Supply Rejection Ratio	PSRR	V_S = ±1.5 V to ±6 V, −40°C ≤ T_A ≤ +125°C	60	100		dB
Supply Current/Amplifier	I_{SY}	V_{OUT} = 0 V		600	1200	µA
		−40°C ≤ T_A ≤ +125°C			1400	µA
DYNAMIC PERFORMANCE						
Slew Rate	SR	−4 V < V_{OUT} < +4 V, R_L = 10 kΩ		2.9		V/µs
Settling Time	t_S	To 0.01%		1000		ns
Gain Bandwidth Product	GBP			8		MHz
Phase Margin	Φ_m			60		Degrees
NOISE PERFORMANCE						
Voltage Noise Density	e_n	f = 1 kHz		10		nV/√Hz
Current Noise Density	i_n	f = 1 kHz		0.4		pA/√Hz

ABSOLUTE MAXIMUM RATINGS

Table 5.

Parameter	Rating
Supply Voltage	±6 V
Input Voltage[1]	±6 V
Differential Input Voltage[2]	±0.6 V
Storage Temperature Range	−65°C to +150°C
Operating Temperature Range	−40°C to +125°C
Junction Temperature Range	−65°C to +150°C
Lead Temperature Range (Soldering, 60 sec)	300°C

[1] For supply voltages less than ±6 V, the input voltage is limited to less than or equal to the supply voltage.
[2] For differential input voltages greater than ±0.6 V, the input current should be limited to less than 5 mA to prevent degradation or destruction of the input devices.

Stresses above those listed under Absolute Maximum Ratings may cause permanent damage to the device. This is a stress rating only; functional operation of the device at these or any other conditions above those indicated in the operational section of this specification is not implied. Exposure to absolute maximum rating conditions for extended periods may affect device reliability.

THERMAL RESISTANCE

Table 6.

Package Type	θ_{JA}[1]	θ_{JC}	Unit
5-Lead SC70 (KS)	376	126	°C/W
5-Lead SOT-23 (RJ)	230	146	°C/W
8-Lead SOIC (R)	158	43	°C/W
8-Lead MSOP (RM)	210	45	°C/W

[1] θ_{JA} is specified for worst-case conditions, that is, θ_{JA} is specified for device soldered in circuit board for SOT-23 and SOIC packages.

ESD CAUTION

ESD (electrostatic discharge) sensitive device. Charged devices and circuit boards can discharge without detection. Although this product features patented or proprietary protection circuitry, damage may occur on devices subjected to high energy ESD. Therefore, proper ESD precautions should be taken to avoid performance degradation or loss of functionality.

TYPICAL PERFORMANCE CHARACTERISTICS

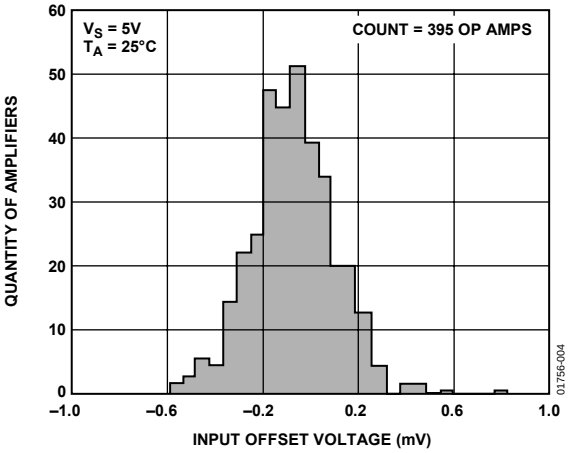

Figure 4. Input Offset Voltage Distribution

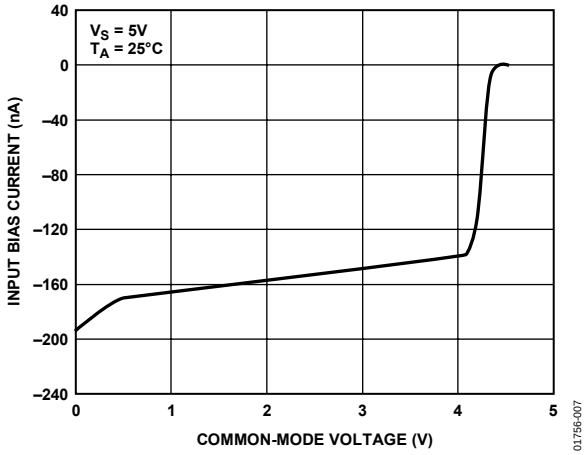

Figure 7. Input Bias Current vs. Common-Mode Voltage

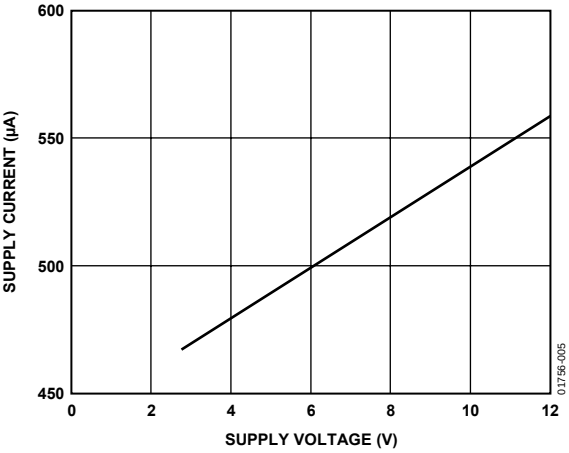

Figure 5. Supply Current per Amplifier vs. Supply Voltage

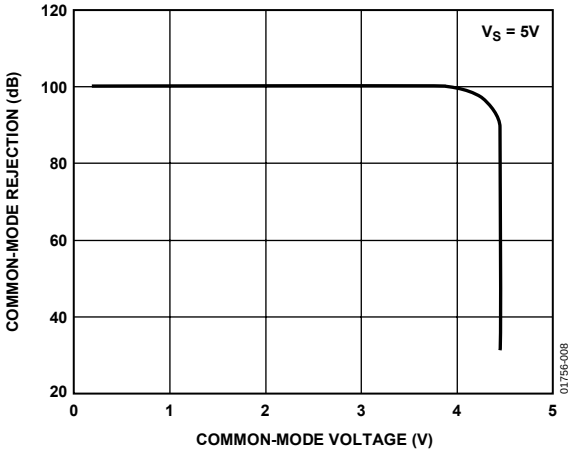

Figure 8. Common-Mode Rejection vs. Common-Mode Voltage

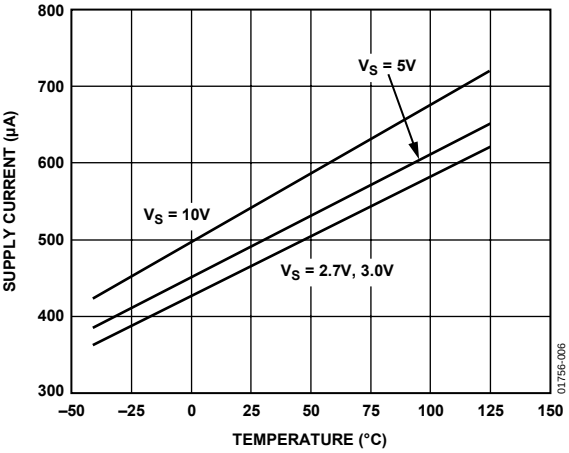

Figure 6. Supply Current per Amplifier vs. Temperature

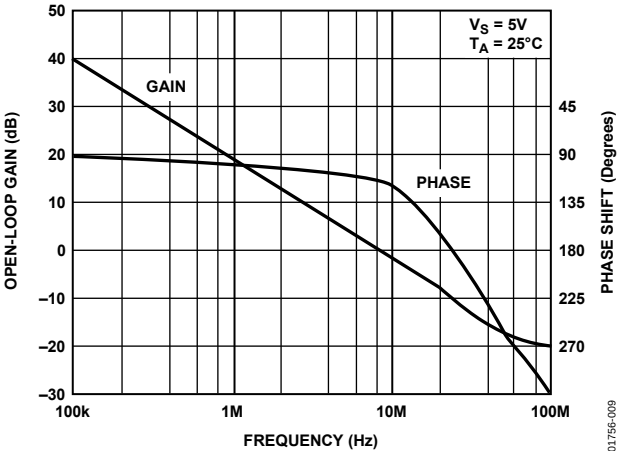

Figure 9. Open-Loop Gain, Phase vs. Frequency

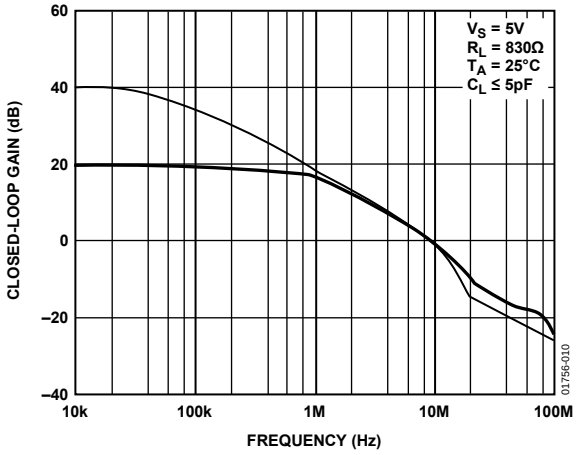

Figure 10. Closed-Loop Gain vs. Frequency

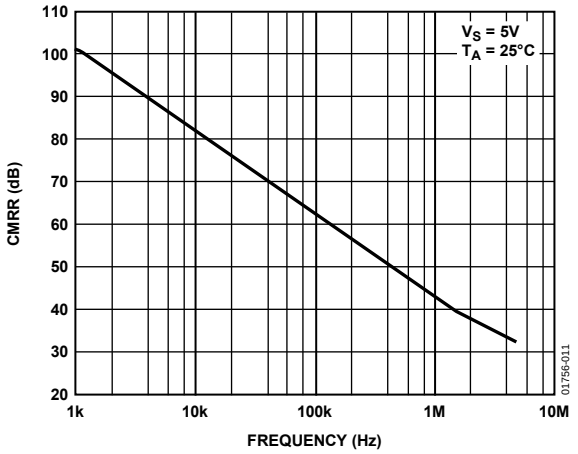

Figure 11. CMRR vs. Frequency

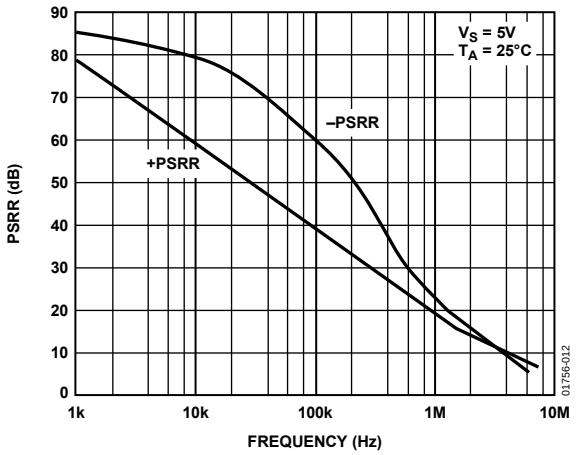

Figure 12. PSRR vs. Frequency

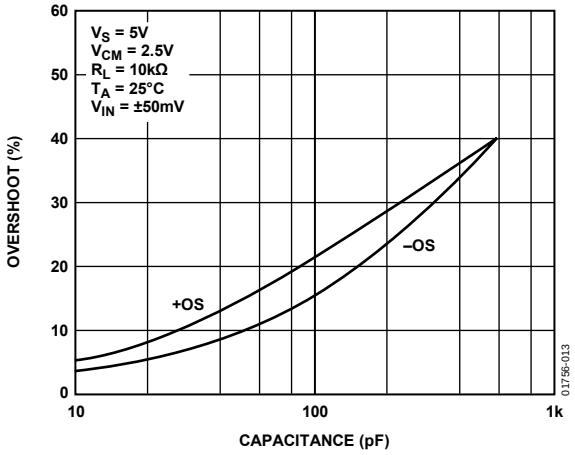

Figure 13. Overshoot vs. Capacitance Load

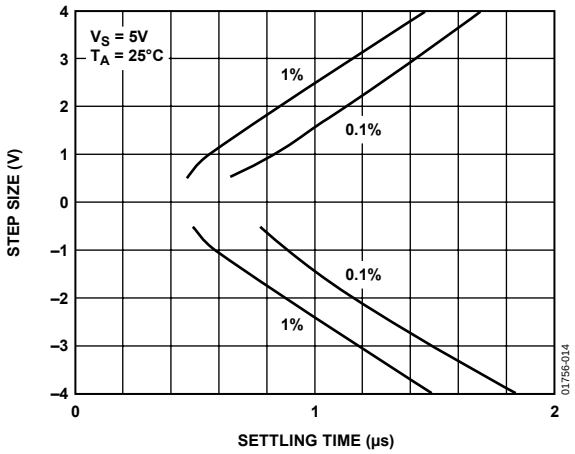

Figure 14. Step Size vs. Settling Time

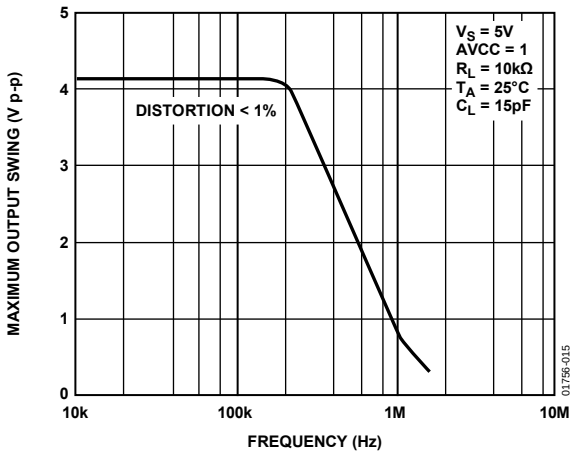

Figure 15. Output Swing vs. Frequency

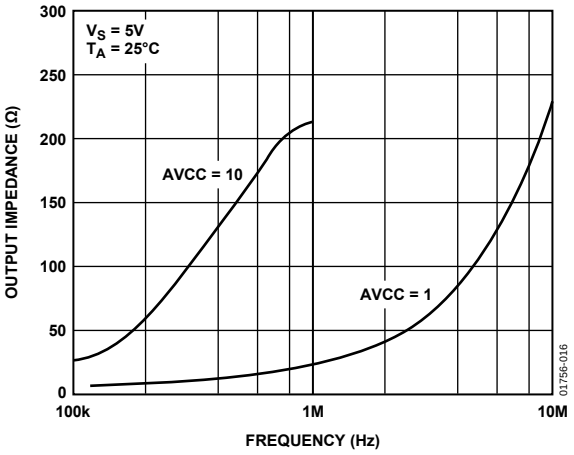

Figure 16. Output Impedance vs. Frequency

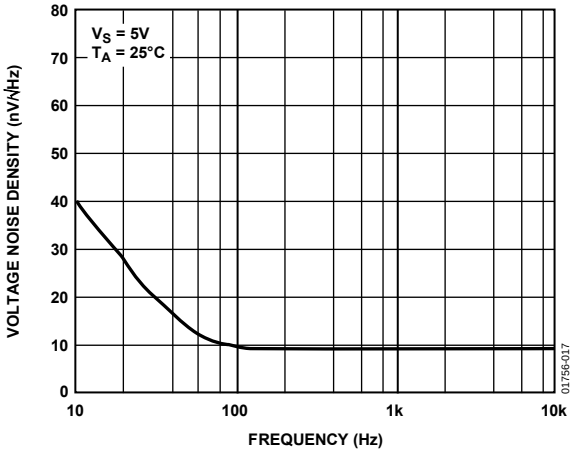

Figure 17. Voltage Noise Density

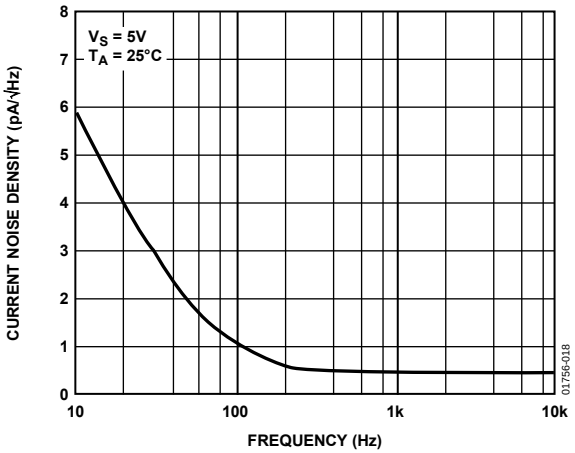

Figure 18. Current Noise Density

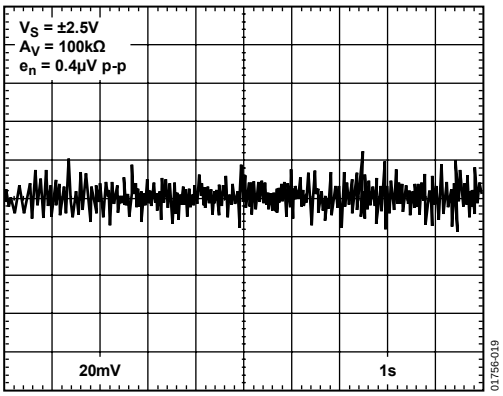

Figure 19. 0.1 Hz to 10 Hz Noise

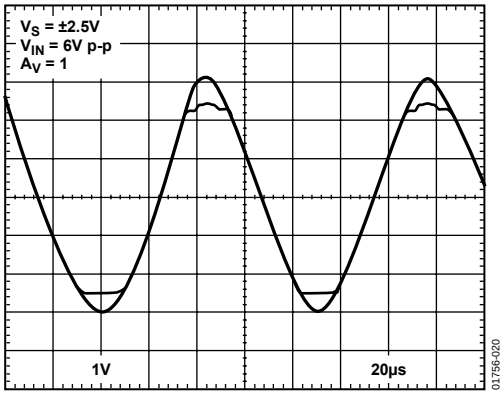

Figure 20. No Phase Reversal

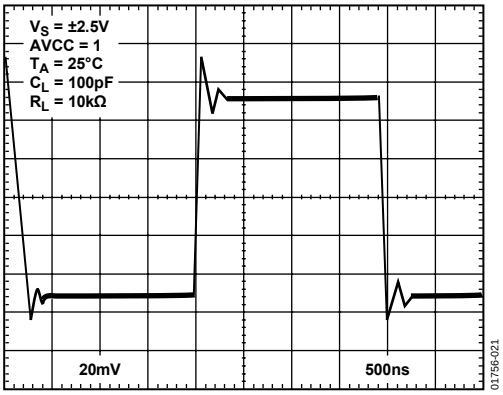

Figure 21. Small Signal Transient Response

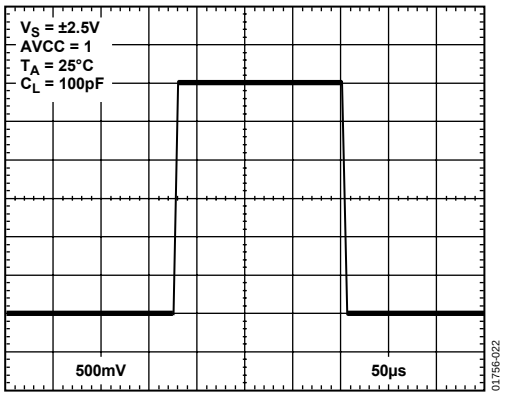

Figure 22. Large Signal Transient Response

APPLICATIONS INFORMATION

MAXIMUM POWER DISSIPATION

The maximum power that can be safely dissipated by the AD8519/AD8529 is limited by the associated rise in junction temperature. The maximum safe junction temperature is 150°C for these plastic packages. If this maximum is momentarily exceeded, proper circuit operation is restored as soon as the die temperature is reduced. Operating the product in an overheated condition for an extended period can result in permanent damage to the device.

PRECISION FULL-WAVE RECTIFIER

Slew rate is probably the most underestimated parameter when designing a precision rectifier. Yet without a good slew rate, large glitches are generated during the period when both diodes are off.

The operation of the basic circuit (shown in Figure 23) should be examined before considering the slew rate further. U1 is set up to have two states of operation. D1 and D2 diodes switch the output between the two states. State one is an inverter with a gain of +1, and state two is a simple unity gain buffer where the output is equal to the value of the virtual ground. The virtual ground is the potential present at the noninverting node of the U1. State one is active when V_{IN} is larger than the virtual ground. D2 is on in this condition. If V_{IN} drops below virtual ground, D2 turns off and D1 turns on. This causes the output of U1 to simply buffer the virtual ground and this configuration is state two. Therefore, the function of U1, which results from these two states of operation, is a half-wave inverter. The U2 function takes the inverted half wave at a gain of two and sums it into the original V_{IN} wave, which outputs a rectified full wave.

$$V_{OUT} = V_{IN} - 2\left|V_{IN}^{-1} < 0\right|$$

This type of rectifier can be very precise if the following electrical parameters are adhered to:

- All passive components should be of tight tolerance, 1% for resistors and 5% for capacitors.
- If the application circuit requires high impedance (that is, direct sensor interface), then an FET amplifier is a better choice than the AD8519.
- An amp such as the AD8519, which has a great slew rate specification, yields the best result because the circuit involves switching.

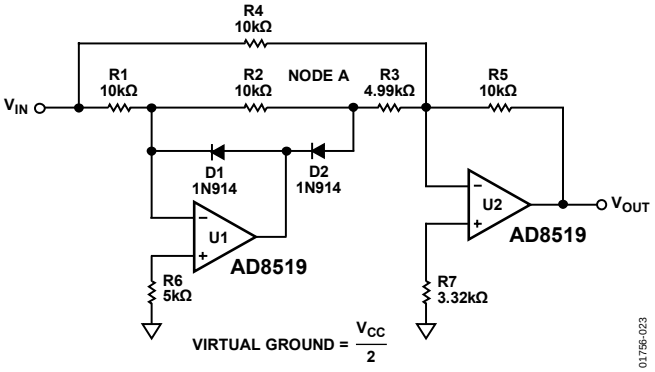

Figure 23. Precision Full-Wave Rectifier

Switching glitches are caused when D1 and D2 are both momentarily off. This condition occurs every time the input signal is equal to the virtual ground potential. When this condition occurs, the U1 stage is taken out of the V_{OUT} equation and V_{OUT} is equal to $V_{IN} \times R5 \times (R4 \parallel R1 + R2 + R3)$. Note that Node A should be V_{IN} inverted or virtual ground, but in this condition, Node A is simply tracking V_{IN}. Given a sine wave input centered around virtual ground, glitches are generated at the sharp negative peaks of the rectified sine wave. If the glitches are hard to notice on an oscilloscope, raise the frequency of the sine wave until they become apparent. The size of the glitches is proportional to the input frequency, the diode turn-on potential (0.2 V or 0.65 V), and the slew rate of the op amp.

R6 and R7 are both necessary to limit the amount of bias current related voltage offset. Unfortunately, there is no perfect value for R6 because the impedance at the inverting node is altered as D1 and D2 switch. Therefore, there is also some unresolved bias current related offset. To minimize this offset, use lower value resistors or choose an FET amplifier if the optimized offset is still intolerable.

The AD8519 offers a unique combination of speed vs. power ratio at 2.7 V single supply, small size (SC70 and SOT-23), and low noise that makes it an ideal choice for most high volume and high precision rectifier circuits.

10× MICROPHONE PREAMP MEETS PC99 SPECIFICATIONS

This circuit, while lacking a unique topology, is anything but featureless when an AD8519 is used as the op amp. This preamp gives 20 dB gain over a frequency range of 20 Hz to 20 kHz and is fully PC99 compliant in all parameters including THD + N, dynamic range, frequency range, amplitude range, and crosstalk. Not only does this preamp comply with the PC99 specifications, it far surpasses them. In fact, when the input noise is 120 dB, this preamp has a V_{OUT} noise of around 100 dB, which is suitable for most professional 20-bit audio systems. At 120 dB THD + N in unity gain, the AD8519 is suitable for 24-bit professional audio systems. In other words, the AD8519 will not be the limiting performance factor in audio systems despite its small size and low cost.

Slew rate related distortion is not present at the lower voltages because the AD8519 is so fast at 2.1 V/µs. A general rule of thumb for determining the necessary slew rate for an audio system is to take the maximum output voltage range of the device, given the design's power rails, and divide by two. In Figure 24, the power rails are 2.7 V and the output is rail-to-rail. Enter these numbers into the equation: 2.7/2 = 1.35 V, and the minimum ideal slew rate is 1.35 V/µs.

While this data sheet gives only one audio example, many audio circuits are enhanced with the use of the AD8519. Examples include: active audio filters such as bass, treble, and equalizers; PWM filters at the output of audio DACs; buffers and summers for mixing stations; and gain stages for volume control.

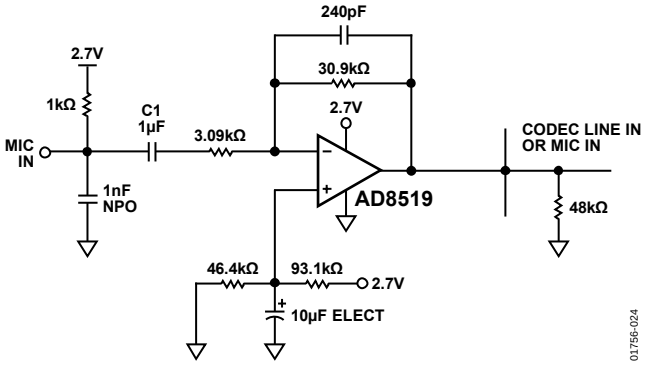

Figure 24. 10× Microphone Preamplifier

TWO-ELEMENT VARYING BRIDGE AMPLIFIER

There are a host of bridge configurations available to designers. For a complete analysis, look at the ubiquitous bridge and its different forms. Refer to the 1992 *Amplifier Applications Guide*[1].

Figure 25 is a schematic of a two-element varying bridge. This configuration is commonly found in pressure and flow transducers. With a two-element varying bridge, the signal is 2× as compared to a single-element varying bridge. The advantages of this type of bridge are gain setting range and single-supply application. Negative characteristics are nonlinear operation and required R matching. Given these sets of conditions, requirements, and characteristics, the AD8519 can be successfully used in this configuration because of its rail-to-rail output and low offset. Perhaps the greatest benefits of the AD8519, when used in the bridge configuration, are the advantages it can bring when placed in a remote bridge sensor. For example, the tiny SC70 and SOT-23 packages reduce the overall sensor size; low power allows for remote powering via batteries or solar cells, high output current drive to drive a long cable; and 2.7 V operation for two-cell operation.

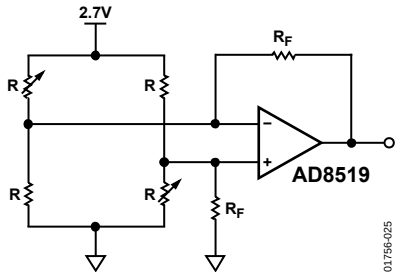

Figure 25. Two-Element Varying Bridge Amplifier

[1] Adolfo Garcia and James Wong, Chapter 2, 1992, *Amplifier Applications Guide*.

OUTLINE DIMENSIONS

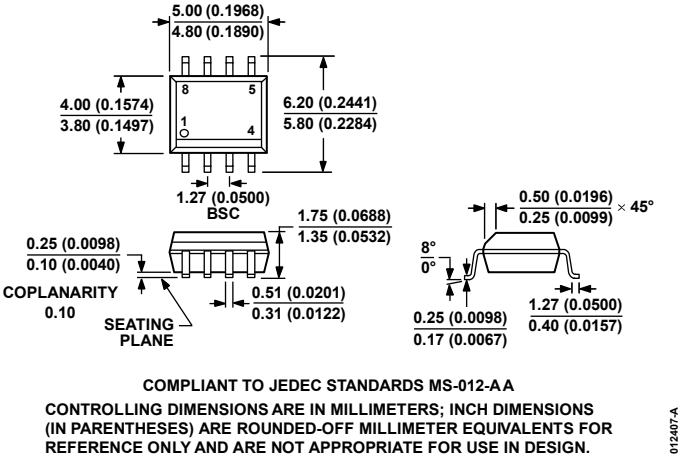

Figure 26. 8-Lead Standard Small Outline Package [SOIC_N]
Narrow Body
(R-8)
Dimensions shown in millimeters and (inches)

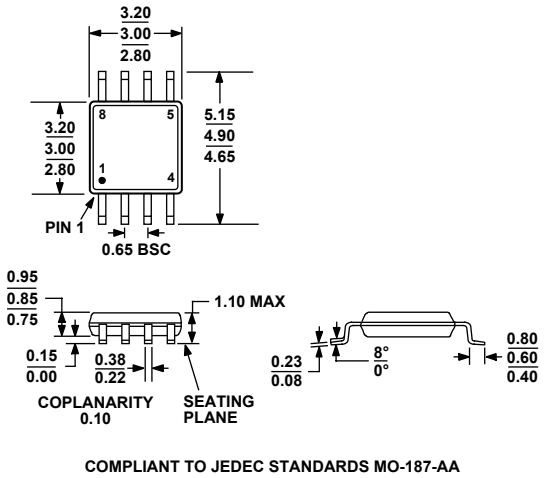

Figure 27. 8-Lead Mini Small Outline Package [MSOP]
(RM-8)
Dimensions shown in millimeters

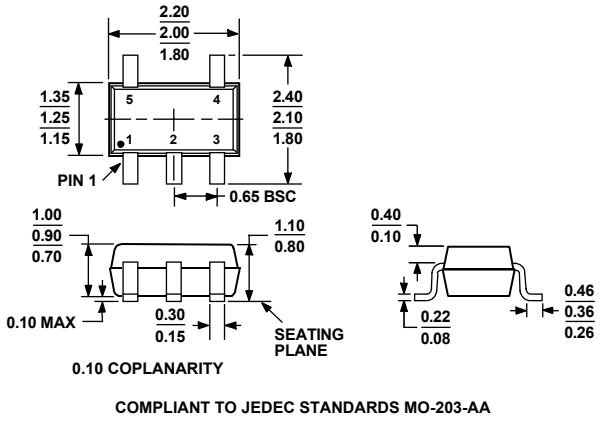

Figure 28. 5-Lead Thin Shrink Small Outline Transistor Package [SC70]
(KS-5)
Dimensions shown in millimeters

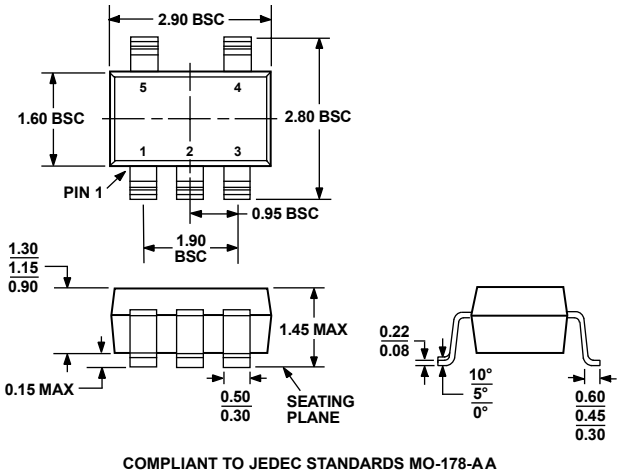

Figure 29. 5-Lead Small Outline Transistor Package [SOT-23]
(RJ-5)
Dimensions shown in millimeters

ORDERING GUIDE

Model	Temperature Range	Package Description	Package Option	Branding Information
AD8519AKS-REEL7	−40°C to +125°C	5-Lead SC70	KS-5	A3B
AD8519AKSZ-REEL7[1]	−40°C to +125°C	5-Lead SC70	KS-5	A11
AD8519ART-REEL	−40°C to +125°C	5-Lead SOT-23	RJ-5	A3A
AD8519ART-REEL7	−40°C to +125°C	5-Lead SOT-23	RJ-5	A3A
AD8519ARTZ-REEL[1]	−40°C to +125°C	5-Lead SOT-23	RJ-5	A3A#
AD8519ARTZ-REEL7[1]	−40°C to +125°C	5-Lead SOT-23	RJ-5	A3A#
AD8519AR	−40°C to +125°C	8-Lead SOIC_N	R-8	
AD8519AR-REEL	−40°C to +125°C	8-Lead SOIC_N	R-8	
AD8519AR-REEL7	−40°C to +125°C	8-Lead SOIC_N	R-8	
AD8519ARZ[1]	−40°C to +125°C	8-Lead SOIC_N	R-8	
AD8519ARZ-REEL	−40°C to +125°C	8-Lead SOIC_N	R-8	
AD8519ARZ-REEL7[1]	−40°C to +125°C	8-Lead SOIC_N	R-8	
AD8529AR	−40°C to +125°C	8-Lead SOIC_N	R-8	
AD8529AR-REEL	−40°C to +125°C	8-Lead SOIC_N	R-8	
AD8529ARZ[1]	−40°C to +125°C	8-Lead SOIC_N	R-8	
AD8529ARZ-REEL[1]	−40°C to +125°C	8-Lead SOIC_N	R-8	
AD8529ARM-REEL	−40°C to +125°C	8-Lead MSOP	RM-8	A5A
AD8529ARMZ-REEL[1]	−40°C to +125°C	8-Lead MSOP	RM-8	A5A#

[1] Z = RoHS compliant part, # denotes RoHS compliant part may be top or bottom marked.

NOTES

©1998–2007 Analog Devices, Inc. All rights reserved. Trademarks and registered trademarks are the property of their respective owners.
C01756–0–5/07(D)